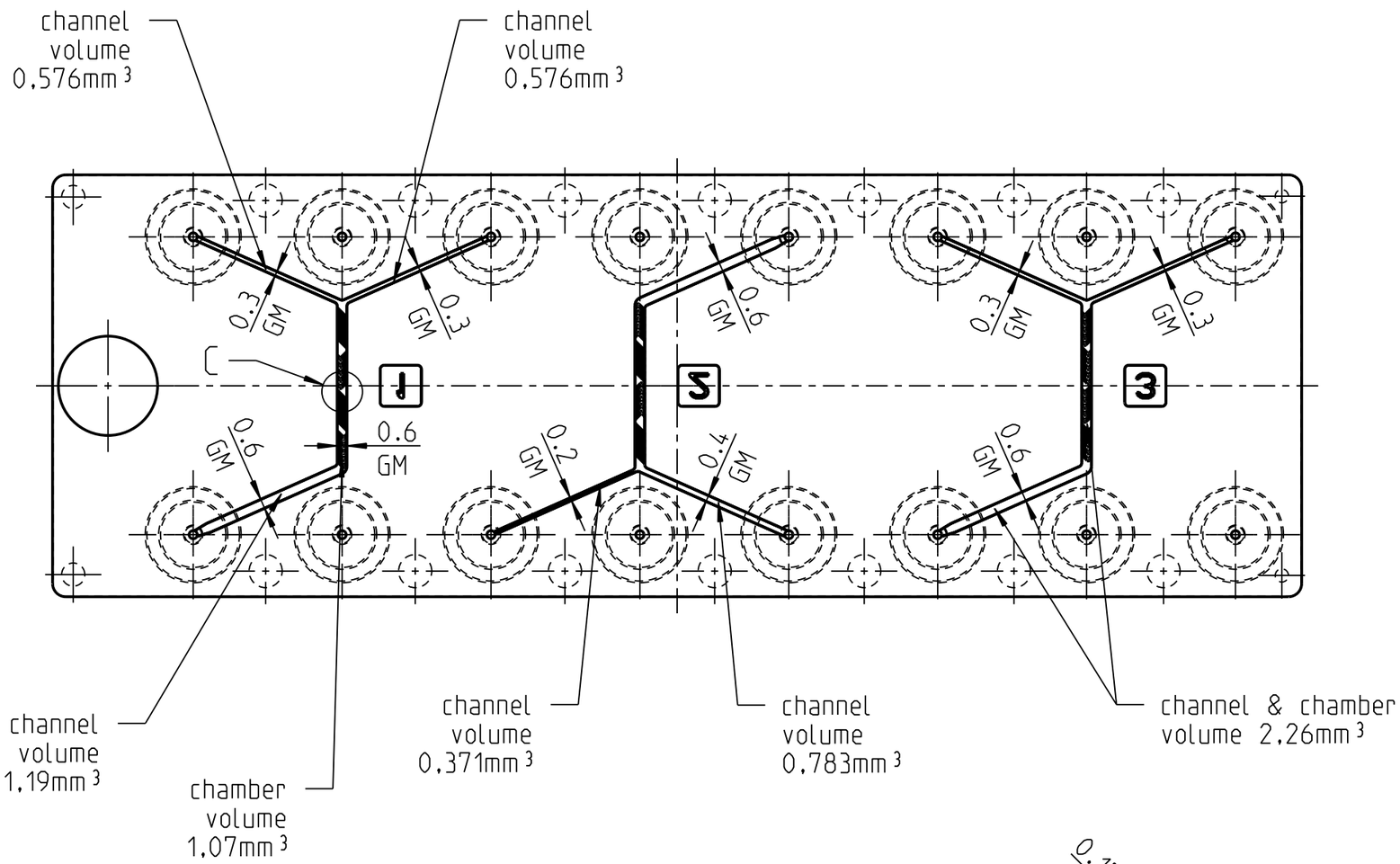

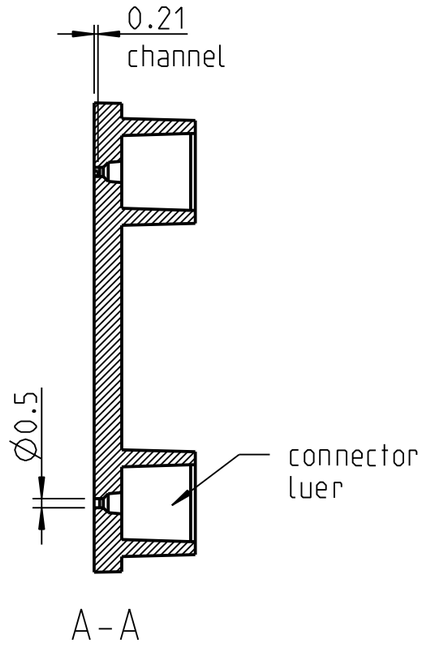

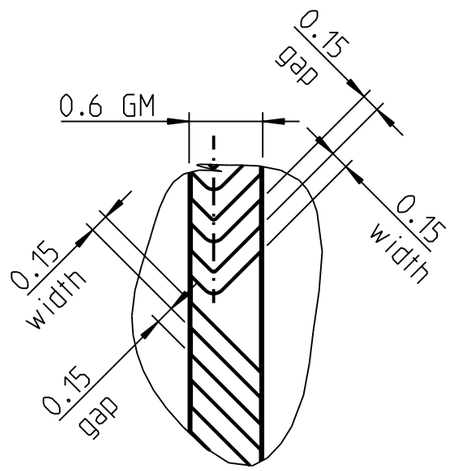

detail structure-I
20:1

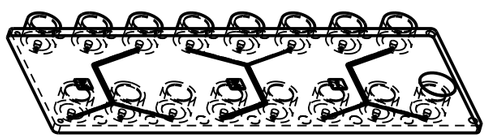

all values without dimensions are in mm

microfluidic ChipShop		Tolerance ISO 8015 General Tolerance ISO 2768-mK
Herringbone mixer	Fluidic 187	Scale 1:1
	Page (1/1)	Created/changed on: 28.06.2010
	Size A3	

MVFO003/1_A3