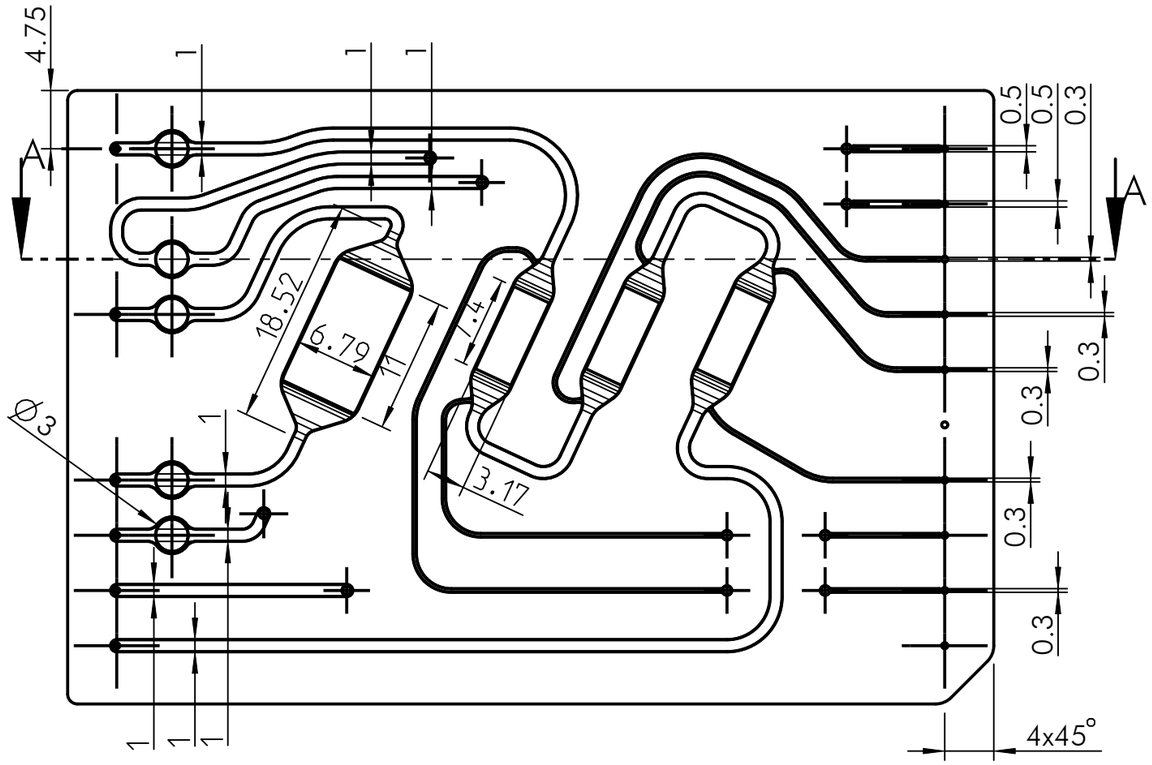

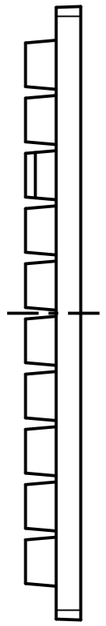

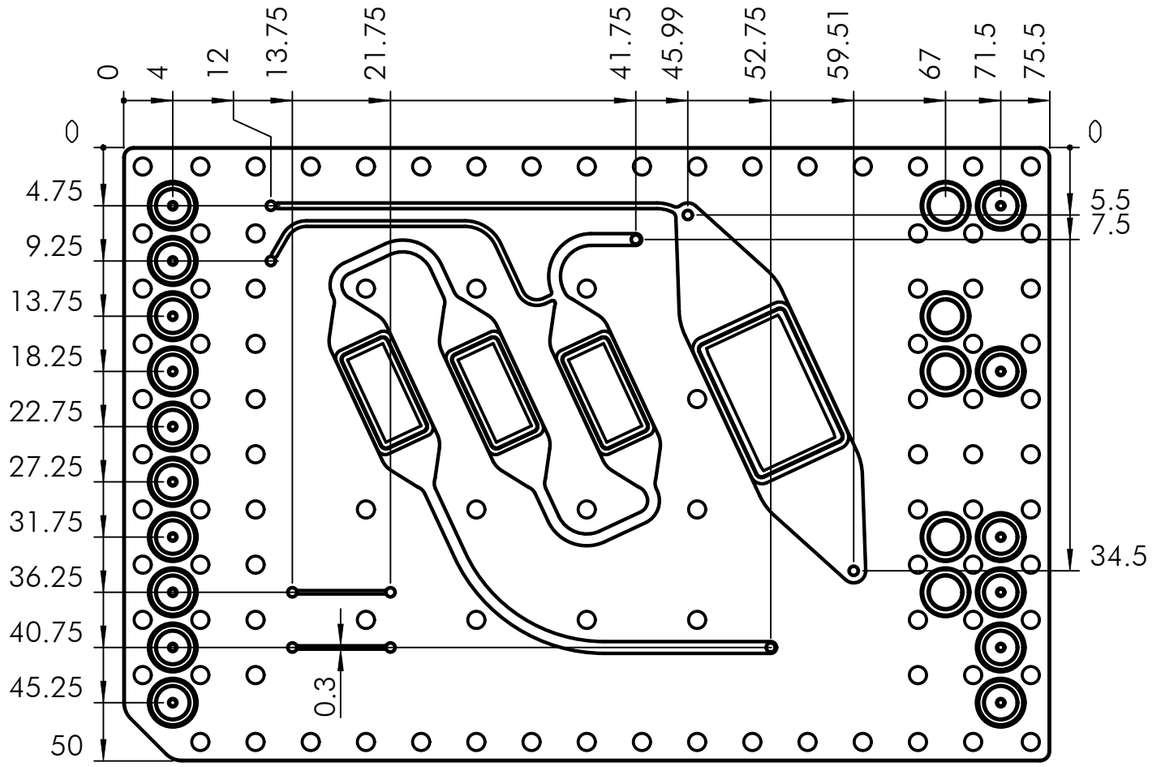

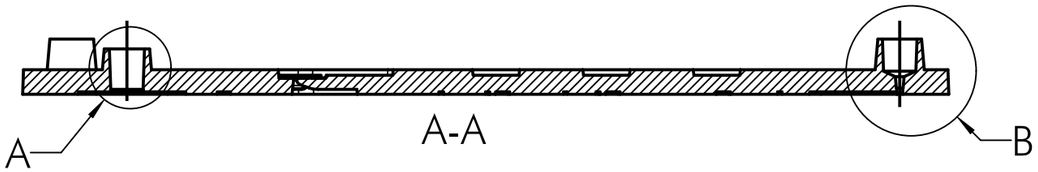

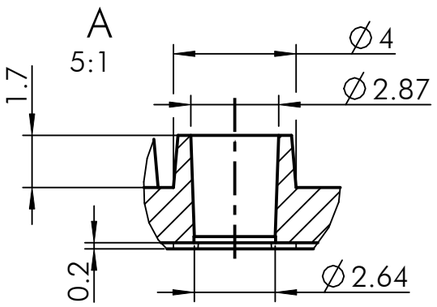

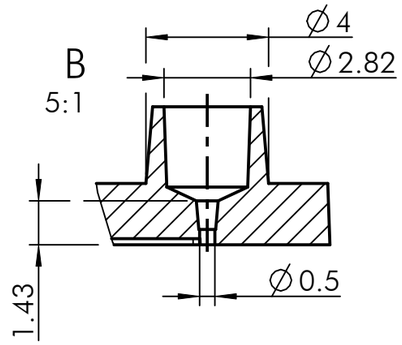

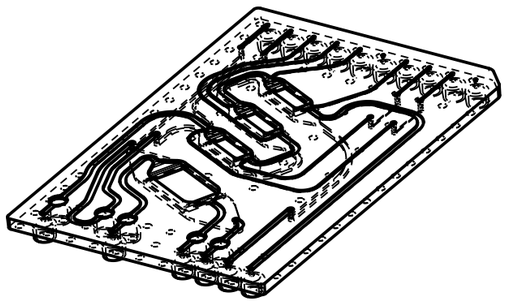

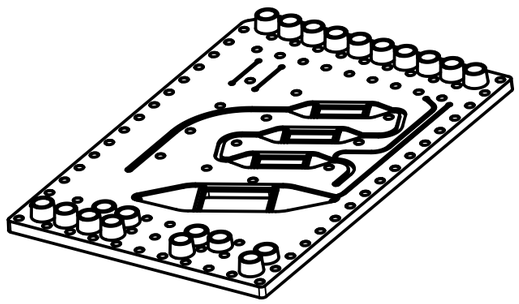

all values without dimensions are in mm

microfluidic ChipShop		Tolerance ISO 8015 General Tolerance ISO 2768-mK
Multicavity cross-flow membrane chip	Fluidic 1356	Scale 2:1
	Page (1/1)	Created/changed on: 23.10.2023
	Size A3	

MVFO003/1_A3